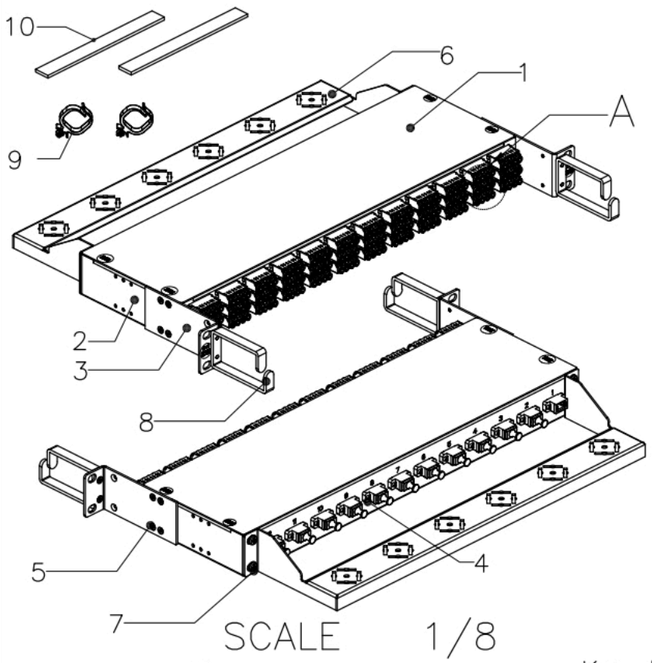

SCALE 1/8

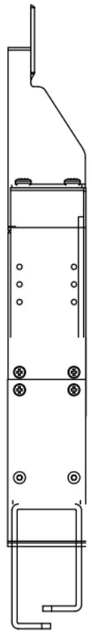

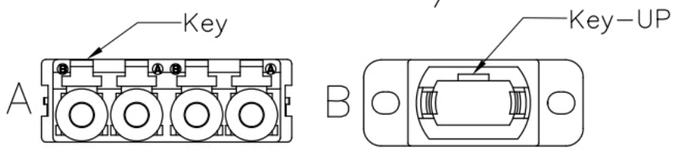

Specification :

1.Top Case: 1.2mm thickness, SPCC, RAL9005 black.
2.Bottom Case: 1.5mm thickness, SPCC, RAL9005 black.
3.Ear: 2.0mm thickness, SPCC, RAL9005 black.
4.Adaptor Screw: M2.0x6.0 Zinc Plated, Wafer Head, black.
5.Case Screw: M3.5x5.0mm Zinc Plated, Wafer Head, black.
6.Support bar: 1.5mm thickness, SPCC, RAL9005 black.
7.Support bar Screw: M5.0x12.0mm Zinc Plated, Wafer Head, black.
8.Cable Holder: 3.0mm thickness, SPCC, RAL9005 black.
9.Wire Saddle: 2PCS NYLON 66 UL 94V-2.
10.Magic Cable Tie: 2PCS 150mm x 16mm x 3mm, black.

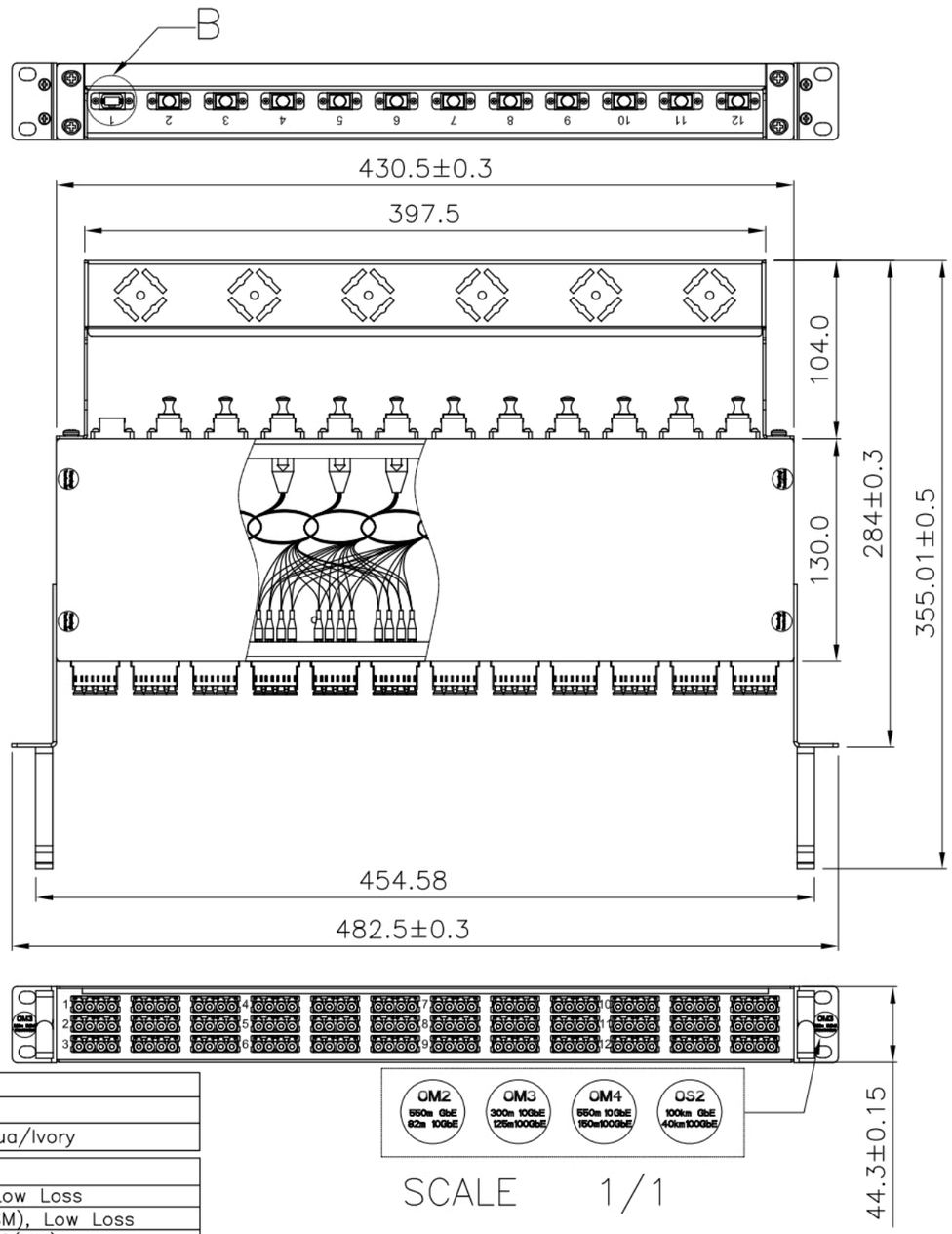

LC Fiber Number	Jcaket Color	Fiber Position	MPO/MTP Fiber Number
Fiber 1	Blue	B	Fiber 1
Fiber 2	Orange	A	Fiber 2
Fiber 3	Green	B	Fiber 3
Fiber 4	Brown	A	Fiber 4
Fiber 5	Gray	B	Fiber 5
Fiber 6	White	A	Fiber 6
Fiber 7	Red	B	Fiber 7
Fiber 8	Black	A	Fiber 8
Fiber 9	Yellow	B	Fiber 9
Fiber 10	Purple	A	Fiber 10
Fiber 11	Pink	B	Fiber 11
Fiber 12	Aqua	A	Fiber 12

LC	Straight Version	MPO/MTP
LC1~12	⟷	1
LC13~24	⟷	2
LC25~36	⟷	3
LC37~48	⟷	4
LC49~60	⟷	5
LC61~72	⟷	6
LC73~84	⟷	7
LC85~96	⟷	8

Adaptor	Type	Color
MPO/MTP	A Type(Up to Down)	Black
LC	Zirconia/Phosphor Bronze	Green/Blue/Aqua/Ivory

	Type
Direct Harness (144port)	OM3 or OM4, 0.9mm Jacket, PVC, MPO&MTP+Guide Pin, LC(MM), Low Loss
	G652D or G657A2, 0.9mm Jacket, PVC, MPO&MTP+Guide Pin, LC(SM), Low Loss
	OM2 or OM3 or OM4, 0.9mm Jacket, PVC, MPO&MTP+Guide Pin, LC(MM)
	G652D or G657A2, 0.9mm Jacket, PVC, MPO&MTP+Guide Pin, LC(SM)

Performance :

	OS2	OM2	OM3	OM4
IL(standard)	<1.00dB	<0.75dB	<0.75dB	<0.75dB
IL(low loss)	<0.75dB		<0.50dB	<0.50dB
RL(standard)	UPC(LC)≧55dB APC≧60dB			
RL(low loss)	UPC(LC)≧55dB APC≧60dB			

a. Dimension : 19.0" x 5.12" x 1.75" (482.53 x 130.0 x 44.5mm)
b. Weight : 3.5kg.

GENERAL TOLERANCE OF DIMENSIONS
X.XXX ±0.005
X.XX ±0.05
X.X ±0.1

DRAWING	07.NOV.2013		TIETOSÄHKÖ OY
CHECK	07.NOV.2013		
APPROVAL	07.NOV.2013		
	DATE	NAME	ITEM NO.: 04
SCALE	1/5(A4)	UNIT mm	DES.: 144Port Fiber Patch Protrude version Panel
	DRAWING NO.	JE 144Port Fiber Patch Panel(SA2)	A2
	DRAWING CLASSIFICATION	S	SHEET 1 1